2D Drawing	IGES	STEP	3D PDF
Solder Profile	CofC RoHS Compliant	CofC REACH Compliant	UL Plastic File
Certificate of Origin	Check Stock	Request a Sample	Send Us An Email

Generated Part Number

KUSBX-SMT-CS4-B30TR

Part Number Builder

KUSBX-SMT	–	CS4	B	30	TR
Series		Type	Insulator Color	Plating	Packaging

Series
KUSBX-SMT - USB Top Mount - Dual Row Contacts

Type
CS4 - C Type

Insulator Color Option
B - Black

Plating Option
30 - 30µ" Gold Plating

Packaging
TR - Tape and Reel

Contact Kycon for more options

UNIVERSAL SERIAL BUS: KUSBX-SMT Series
USB Type C Top Mount - Dual Row SMT Contacts

Product Features
USB Version 3.1 - Gen2 (10Gbps)
Dual Row SMT Contacts with Through Hole Shield Tabs

Performance Specifications
Materials and Finish
Housing:
High Temperature Thermoplastic, UL94V-0 Rated,
Black Color
Shield:
Stainless Steel, Nickel Plated
Contact Material:
Copper Alloy
Contact plating:
30u" Gold Plated on Contact Area,
Tin Plated on Solder Tails,
All over Nickel Underplate

Electrical Characteristics
Rated Current
5.0A Inclusive (1.25A Ea.) For Pins
A4, A9, B4, and B9 (VBUS)
1.25A For pin A5 or B5 (VCONN)
6.25A Inclusive For Pins
A1, A12, B1, and B12 (GND)
0.25A For All Other Pins
Rated Voltage: 20V
Insulation Resistance
100 Megohms Min. at 250V DC
Contact Resistance
50 milliohms Max.
Dielectric Withstanding Voltage
100V AC RMS For 1 Minute
USB Version: 3.1 Gen2 (10Gbps)

Mechanical Characteristics
Insertion Force: 0.4kg - 3.0kg
Withdrawal Force: 0.3kg - 3.0kg
Durability 10000 Mating Cycles Min.
Operating Temperature:
-40°C to +85°C
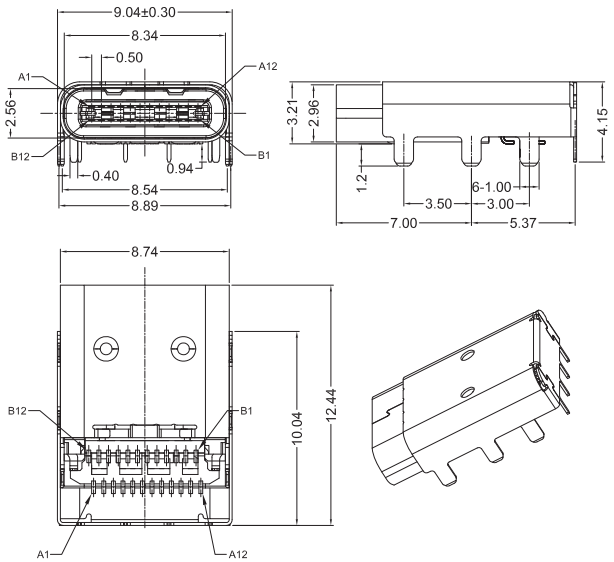
KUSBX-SMT
Dimensions in mm